EATON | Vickers

Proportional Direction Valves without Feedback

Pressures to 315 bar (4500 psi)

KBD/TG4V-5, 1* Series

VICKERS®

Contents

Introduction

General Description

Vickers™ KB*G4V-5 proportional valves are designed to provide controlled oil flow in proportion to an electrical command signal. They are available in two versions. Firstly a double solenoid version that will provide reversible flow and return to an actuator. Secondly a single solenoid version that provides a single direction of flow.

The KB valve incorporates an integral control amplifier. Factory set adjustments for gain, spool deadband compensation and dither ensure excellent reproducibility valve-to-valve.

Electrical connection is via a standard 7-pin plug and requires a power supply and command signal which can be either voltage or current (model code option).

In addition to improving machine performance and life, the KB proportional valves substantially simplify system design by combining direction and flow capabilities in one single package that mounts onto a standard ISO 4401 interface.

New Features and Benefits

- State of the art digital electronic technology
- Rugged and robust die-cast housing
- Optional voltage (+/-10 volt) or current (4-20 mA) demand input
- Adjustable ramp (2 sec)
- Wide range of supply voltage
- Optional external enable feature
- IP67 environmental protection
- Full CE electromagnetic capability to EN 50081-2 and EN 50082-2
- Vibration and shock tested

Standard Features and Benefits

- Factory adjusted to ensure excellent valve-tovalve reproducibility
- Installation wiring reduced and simplified
- Wide range of spool and flow rate options
- Simple valve removal and replacement for service i.e. plug and play
- Standard 7-pin connector
- 315 bar (4500 psi) pressure rating
- Supported by auxiliary function electronic modules

Typical Section

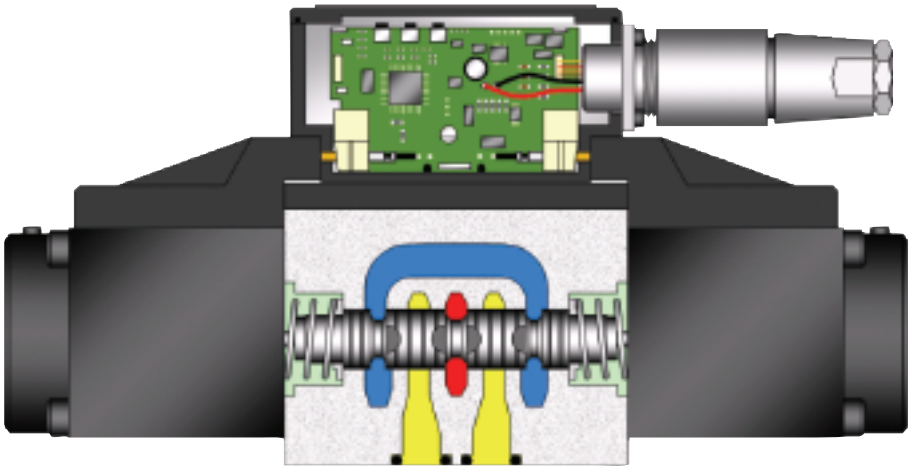

KBDG4V-5-PE, 1* Series

Model Code

KB * G 4 V 5 ** * ** * ** * M * P*7 H 7 10

1 2 3 4 5 6 7 8 9 10 11 12 13 14 15 16 17

1 **Valve type**

KB – Proportional valve with integral amplifier, B series

2 **Control Type**

D – Directional valve

T – Throttle valve

3 **Mounting**

G – Subplate mounted

4 **Operation**

4 – Solenoid operated

5 **Pressure rating**

V – 315 bar (4500 psi), ports P, A & B

6 **Interface**

5 – ISO 4401, size 05-02-0-94, ANSI B93.7M-D05

7 **Spool Type**

2 – Closed center

33 – P port closed, A & B to tank

8 **Spool/Spring Arrangement**
(See next page for Spool Configurations)

C – Spring centered, dual solenoid

B – Spring centered, single solenoid

9 **Spool Flow Rating - at 5 bar (75 psi) per meter ing flow path**

30 – 30 L/min (7.9 USgpm)

50 – 50 L/min (13.2 USgpm)

65 – 65 L/min (17.2 USgpm)

70 – 70 L/min (18.5 USgpm)

10 **Spool Metering Type**

S – Meter-out only (65 spool only)

N – Meter-in and meter-out

11 **Flow Rating for Asymmetric Flow Spools**
(Omit for symmetrical spools)

25 – 25 L/min (6.6 USgpm) (2C50N25 only)

35 – 35 L/min (9.24 USgpm)

12 **Manual Overrides**

Z – No overrides

13 **Electrical Command Option**

1 – +/- 10V control signal

2 – 4-20 mA control signal

14 **Electrical Connection**

PC7 – 7 pin connector without plug supplied

PE7 – 7 pin connector with plug supplied

PH7 – As PE7 but with pin "C" used for enable signal

PR7 – As PC7 but with pin "C" used for enable signal

15 **Coil Rating**

H – 24V DC amplifier supply

16 **T Port Pressure**

6 – 160 bar (2270 psi) (65S spool only)

7 – 210 bar (3000 psi) (not available with 65S spool)

17 **Design number**

1 – 1* series - Subject to change

WARNING

Valves with integral amplifiers are supplied with or without the metal 7-pin plug. The Vickers plug, part no. 934939, must be correctly fitted to ensure that the EMC rating and IP67 rating are achieved. The plug retaining nut must be tightened with a torque of 2-2,5 Nm (1.5-2.0 lbf ft) to effect a proper seal.

Spool Data

Spool Symbols

Available Spools for KBDG4V-5

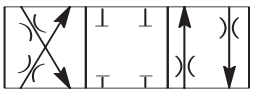

Spool type 2C

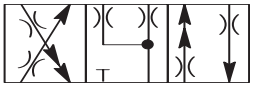

Spool type 33C

Spool Type and Flow Ratings

Symmetric Spools

Base line starting at p = 5 bar (72 psi) per metering flow path, e.g. B to T. For actual maximum flow refer to power capacity envelope curves.

Spool code	Spool symbol	Flow rating
For KBDG4V-5 valves:		
2C30N	2C	30 L/min (7.9 USgpm)
2C50N	2C	50 L/min (13.2 USgpm)
2C70N	2C	70 L/min (18.5 USgpm)
2C65S	2C	65 L/min (17.2 USgpm)
33C30N	33C	30 L/min (7.9 USgpm)
33C50N	33C	50 L/min (13.2 USgpm)
For KBTG4V-5 valves:		
2B30N	2B	30 L/min (7.9 USgpm)
2B50N	2B	50 L/min (13.2 USgpm)
2B70N	2B	70 L/min (18.5 USgpm)

Available Spools for KBTG4V-5

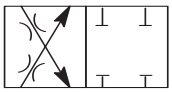

Spool type 2B
meter-in/meter-out

Spool type 33B
meter-in/meter-out

Asymmetric Spools

Figure preceding metering type designator, "N" (e.g. 2C***N) is flow rating P-A, or A-T ("A" port flow); figure after "N" (N***) is flow rating P-B, or B-T ("B" port flow).

Spool code	Spool symbol	Flow rating
For KBDG4V-5 valves:		
2C50N25	2C	50 L/min (13.2 USgpm) "A" port flow 25 L/min (6.6 USgpm) "B" port flow
2C60N35	2C	60 L/min (15.8 USgpm) "A" port flow 35 L/min (9.24 USgpm) "B" port flow
33C50N25	33C	50 L/min (13.2 USgpm) "A" port flow 25 L/min (6.6 USgpm) "B" port flow

Functional Symbols

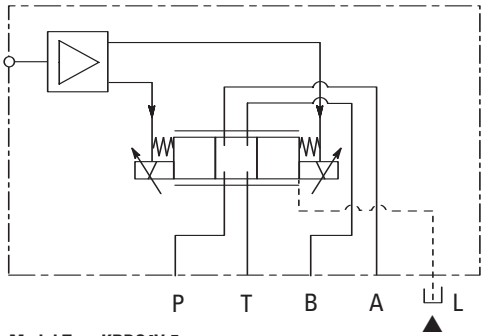

Model Type KBDG4V-5

Proportional directional valve (with integrated electronics)

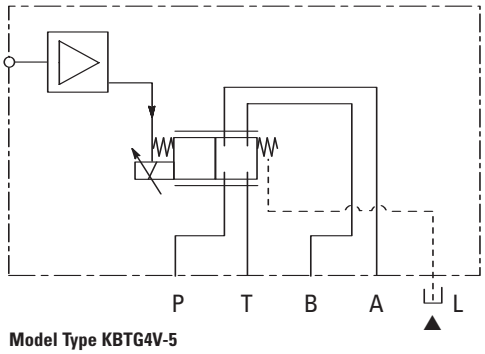

Model Type KBTG4V-5

Proportional throttle valve (with integrated electronics)

▲ If port T pressure will not exceed 160 bar (2320 psi), port L need not to be connected to tank.

Operating Data

Proportional Directional

Valves without Feedback

KBD/TG4V-5

Data is typical with fluid at 36 cSt (168 SUS) and 50 C (122 F).

Power supply	24V DC (21V to 34V including 10% peak-to-peak ripple) max current 1.2A
Command signal (Volts) Input impedance Common mode voltage to pin B	0 to +10V DC, or 0 to –10V DC, or –10 V to +10 V DC 47 kΩ 4V
Command signal (Current) Input impedance	4 to 20 mA 100Ω
Valve enable signal Enable Disable Input impedance	 >9.0V (34V max) <2.0V 36 kΩ
7-pin plug connector 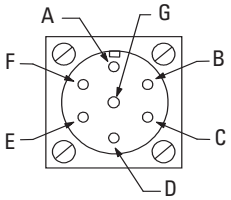 View of pins of fixed half	Pin Description A Power supply positive (+) B Power 0V C Valve enable (PH7 & PR7) D Command signal (+V or current in) E Command signal (–V or current return) F Output monitor G Protective ground
Electromagnetic compatibility (EMC): Emission (10 V/m) Immunity (10 V/m)	 EN 50081-2 EN 50082-2
Monitor signal (pin F) KDB values Output impedance	2V for 1.2 solinoid current 10kΩ
Power stage PWM frequency	1.2 kHz nominal
Step input response, with flow through P–A–B–T, Δp=5 bar (72 psi) per metering path, e.g. P–A Required flow step for 24V version: 0 to 100% 100% to 0	 Time to reach 90% of required step: 115 ms 105 ms
Reproducibility, valve-to-valve (at factory settings): Flow at 100% command signal	≤5%
Protection: Electrical Environmental	 Reverse polarity protected IEC 529, Class IP67
Ambient air temperature range for full performance Oil temperature range for full performance	0° C to 70° C (32° F to 158° F) 0° C to 70° C (32° F to 158° F)
Minimum temperature at which valves will work at reduced performance	–20° C (–4° F)
Storage temperature range	–25° C to +85° C (–13° F to +185° F)
Supporting products: Auxiliary electronic modules (DIN -rail mounting): EHA-CON-201-A2* signal converter EHD-DSG-201-A-1* command signal generator EHA-RMP-201-A-2* Ramp generator EHA-PSU-201-A-10 Power supply EHA-PID-201-A-20 PID controller	 See catalog GB 2410A See catalog GB 2470 See catalog GB 2410A See catalog GB 2410A See catalog GB 2427
Ramp time	0-2 sec for full step input (0-100%)
Relative duty factor	Continuous rating (ED = 100%)
Hysteresis with flow through P-A-B-T	<8% of rated flow
Mass: KBDG4V-5 KBTG4V-5	 7.2 kg (15.9 lb) approx. 5.7 kg (12.6 lb) approx.

Operating Data

Pressure and Flow Rates

MAXIMUM PRESSURES, BAR (PSI)

Model	Port L Condition ▲	Ports P, A & B	T	L ▲
KBDG4V-5-**C**N-Z-M*-P*7-H7-10	Externally drained	315 (4500)	210 (3000)	10 (142)
All KBDG4V-5 models	Blocked by mating surface	315 (4500)	160 (2300)	160 (2300)
KBTG4V-5	Externally drained	315 (4500)	210 (3000)	10 (142)
	Blocked by mating surface	315 (4500)	160 (2300)	160 (2300)

▲ If port T pressure will not exceed 160 bar (2320 psi), port L need not be connected to tank.

For spool types 2C and 33C

Δp = 10 bar (142 psi) for looped flow P–A–B–T (or P–B–A–T)

MINIMUM RECOMMENDED FLOW RATES

Valve Size/Spool Code	L/min	In^3/min
KBDG4V-5-**C30N	1,5	91
KBDG4V-5-**C50N	2,5	152
KBDG4V-5-**C70N	3,0	182
KBDG4V-5-**C65S	3,0	182

KBTG4V-5 Power Capacity Envelopes

Single Solenoid Models

Single Flow Path P to B

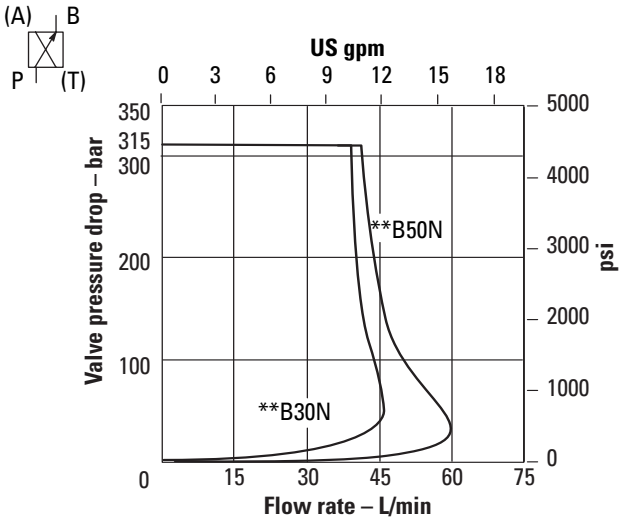

Looped Flow Path P to B plus A to T

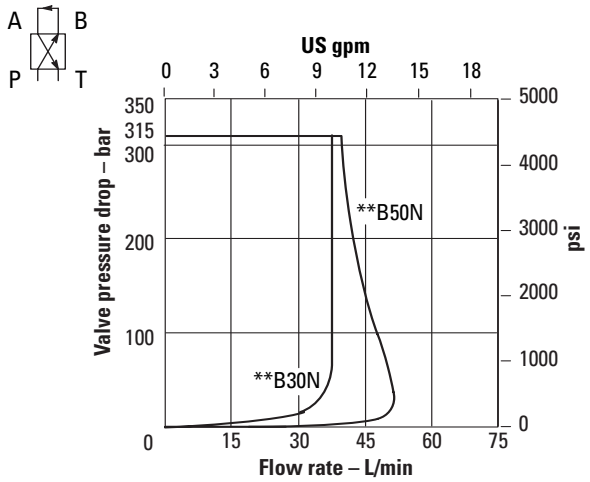

Parallel Flow Path P to B and A to T using parallel flow path module:

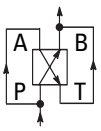

KDGMA-5-616877-10R■ or
KDGMA-5-02-139150-10S■

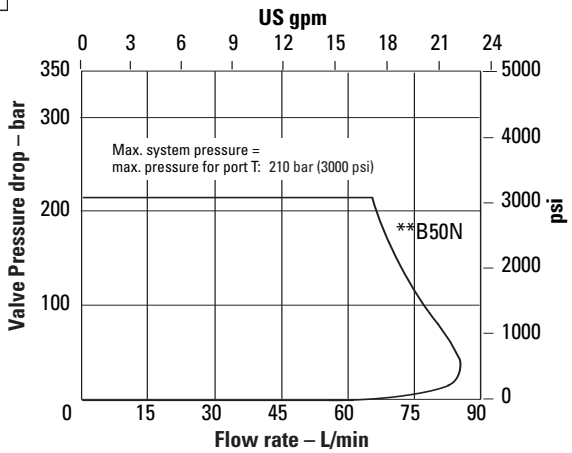

KBDG4V-5 Power Capacity Envelopes

Double Solenoid Models

Single Flow Path P to A, or P to B

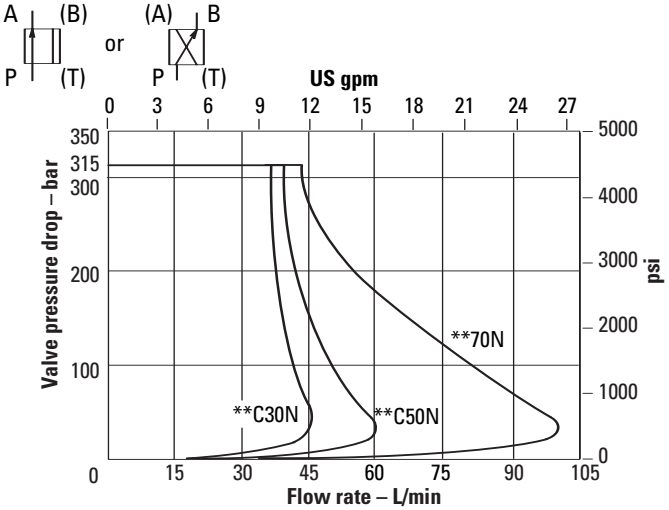

Looped Flow Path P to A (or B) plus B (or A) to T

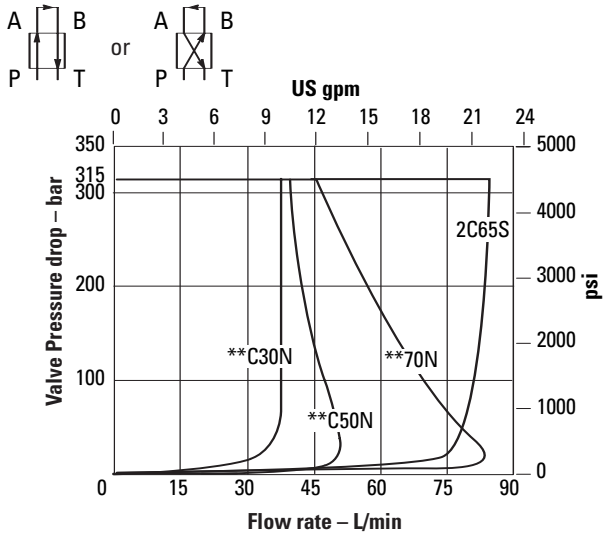

Frequency Response

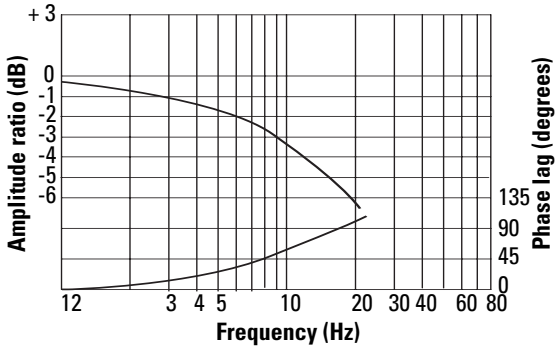

■ See catalog 2336, "Subplates and Auxiliary Connection Plates, Size 05".

Performance Curves

KBTG4V-5

Single Solenoid Models

Flow gain

Single Flow Path P to B

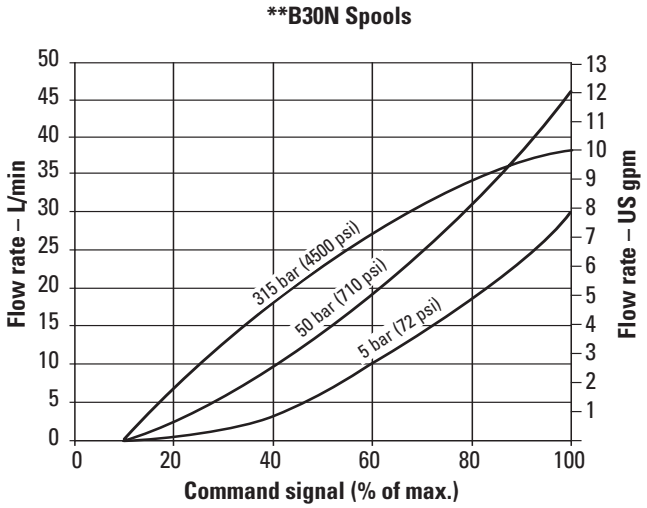

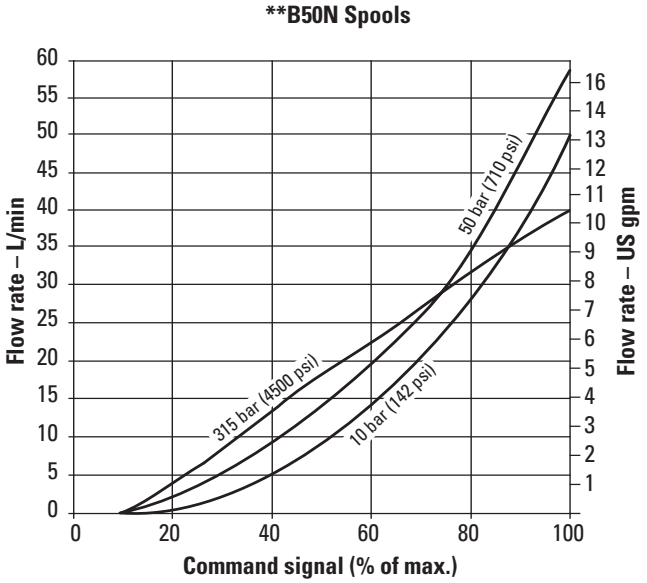

Parallel Flow Paths P to B and A to T using parallel flow path module:

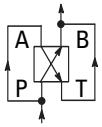

KDGMA-5-616877-10R■ or
KDGMA-5-02-139150-10S■

Maximum system pressures for this configuration:

With "L" port externally drained - 210 bar (3000 psi)

With "L" port blocked - 160 bar (2320 psi)

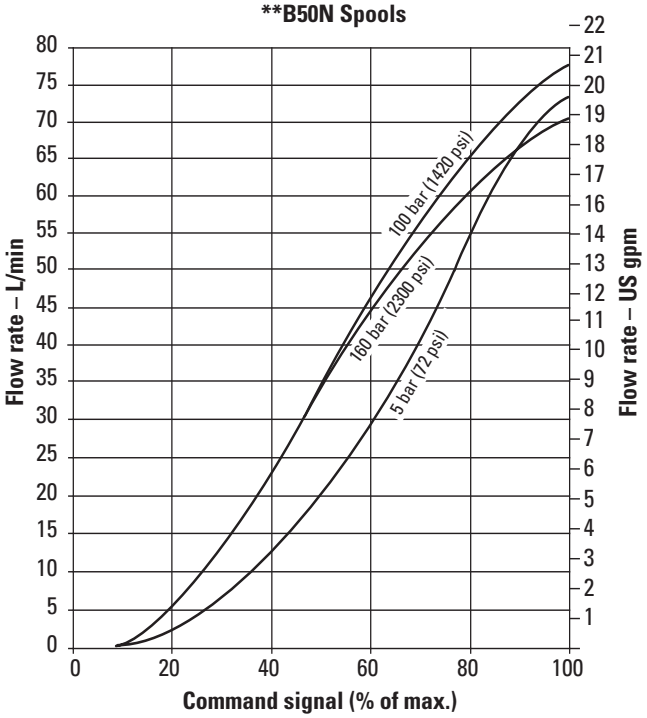

■ See catalog 2336, "Subplates and Auxiliary Connection Plates, Size 05".

KBDG4V-5 Double Solenoid Models

Flow gain
Single Flow Path P to A or P to B

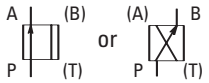

**C30N Spools

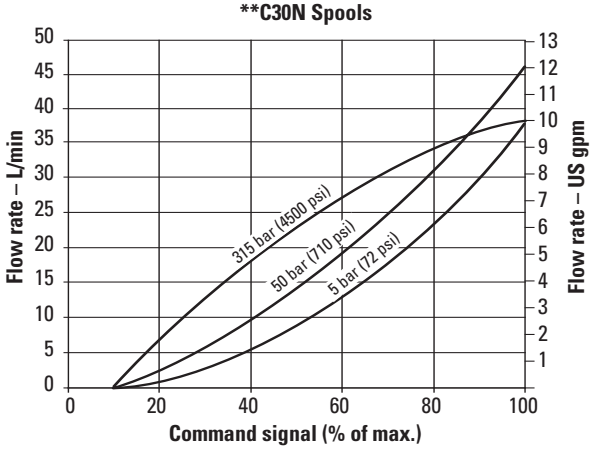

**C50N Spools

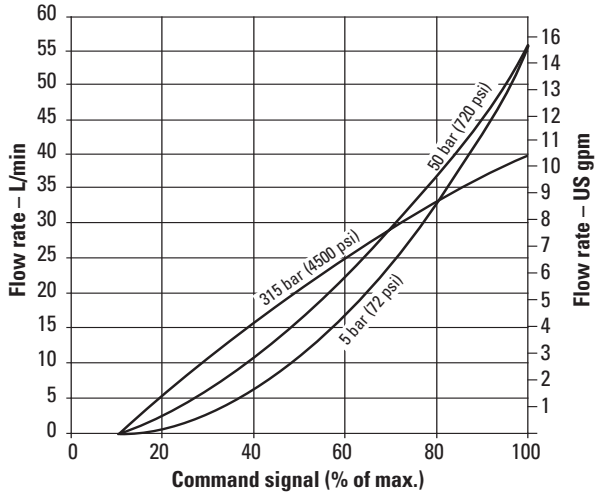

**C2C65S Spools

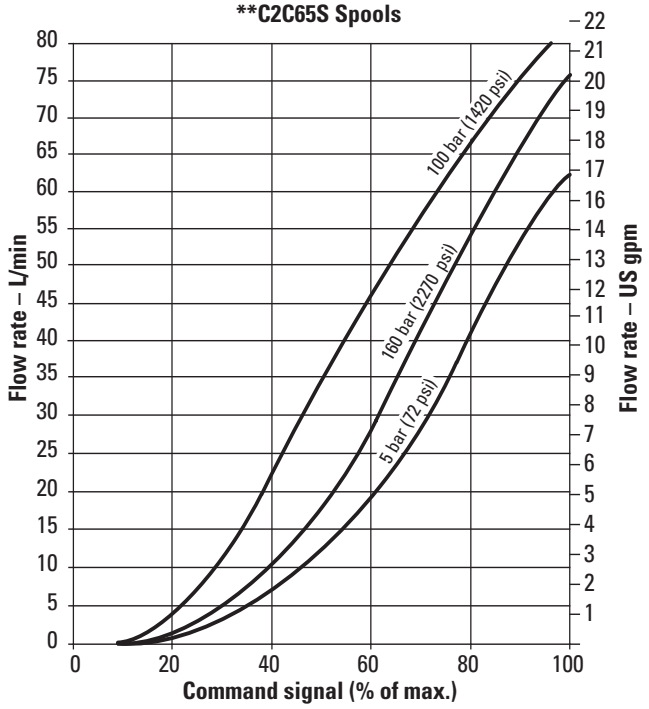

KBDT4V-5 Double Solenoid Models

Flow gain
Looped Flow paths P to A, (or B), plus B (or A) to T

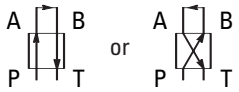

**C30N Spools

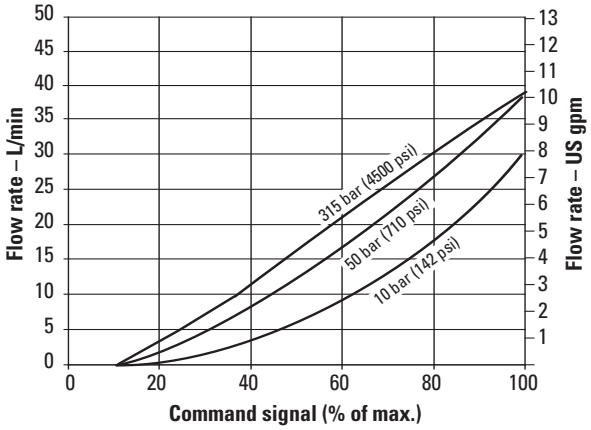

**C50N Spools

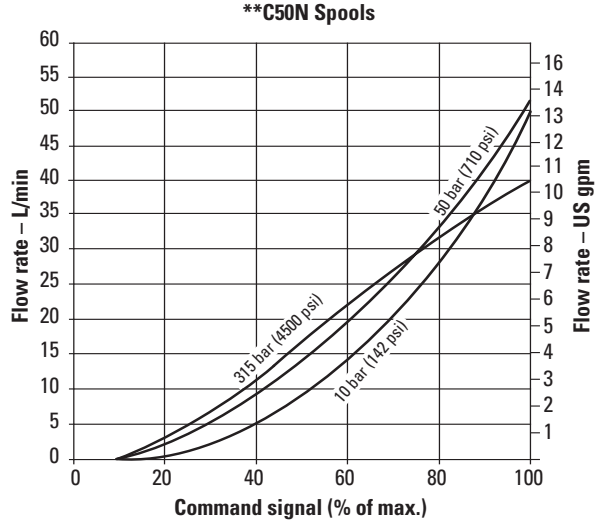

**C70N Spools

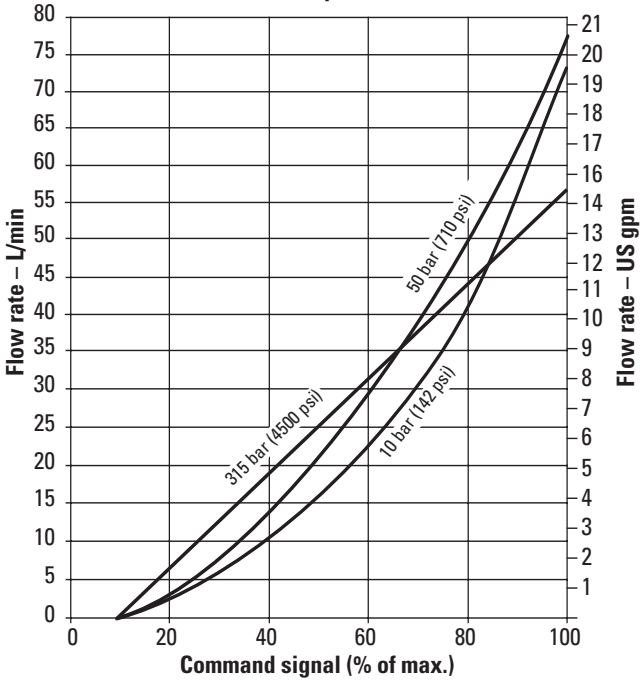

Installation Dimensions

KBDG4V-5

mm (Inch)

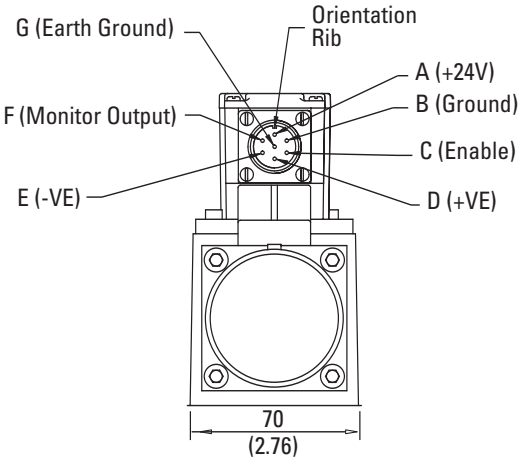

View with Connector Removed to Show Pin Designations KBD & KBT Models

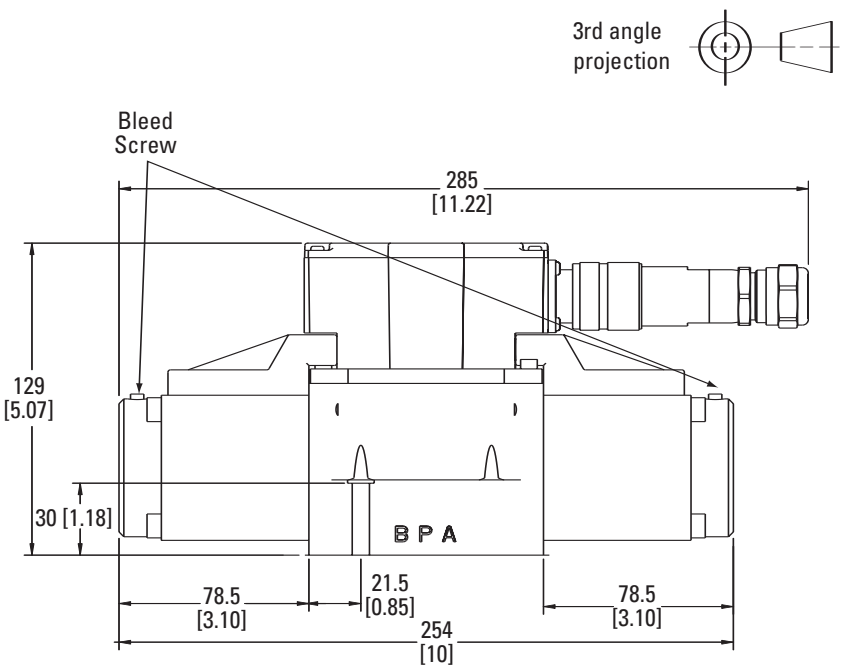

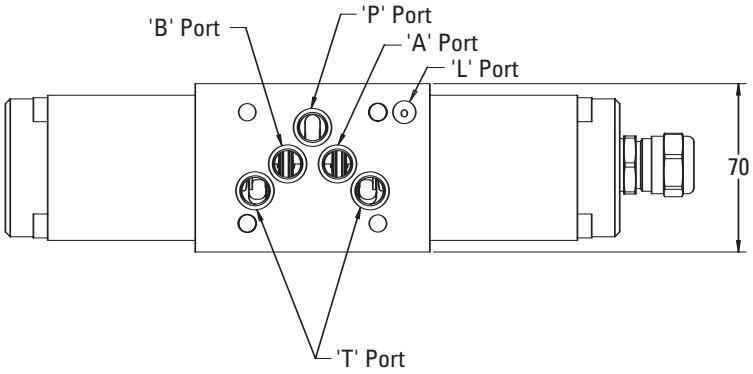

KBDG4V-5-*C-***-Z-M*-P*7-H*-10
Models Shown with "PE7" Option Installed

KBTG4V-5

mm (Inch)

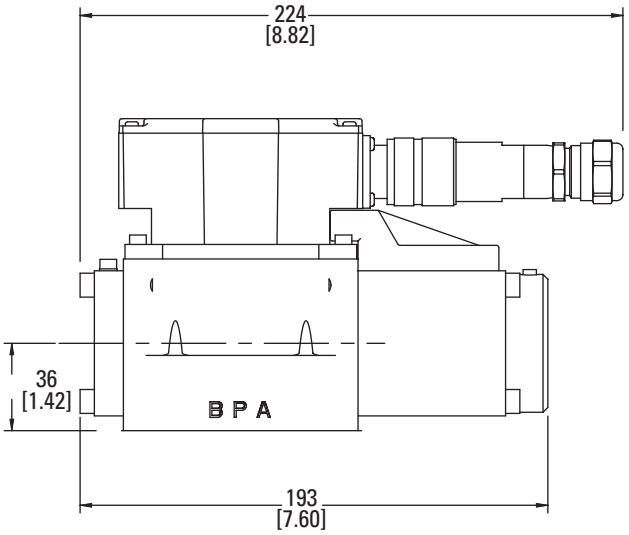

KBTG4V-5-*B***-Z-M*-P*7-H*-10
Models Shown with "PE7" Option Installed

▲ Mounting surface seals supplied
For subplate options, see attached catalogue 2336; for mounting bolt kit options, see catalogue 2314.

† Note: Bleed screw locations. Air bleed: torque to 3,4-4,4 Nm (30-39 lbf ft).

NOTE: For optimum valve operation, bleed the air from the proportional solenoids at initial start-up. This may be done as follows:

- Remove the bleed screws until no bubbles appear and then reinstall bleed screws, or...
- Remove both bleed screws, and use a standard oil can nozzle to pump fluid in one side until it flows, free of air bubbles, out the other side. Reinstall screws.

If there is no inherent back pressure in the tank port of the circuit, do not allow the tank line to empty. This may be prevented by installing a check valve in the tank line. The cracking pressure of the check valve should be in the range of 15-3 bar (22-45 psi).

WARNING

Valves with integral amplifiers are supplied with or without the metal 7-pin plug. The Vickers™ plug, part no. 934939, must be correctly fitted to ensure that the EMC rating and IP67 rating are achieved.

Subplates and Mounting Surfaces

General Description

When a subplate is not used, a machined pad must be provided for valve mounting. Pad must be flat within 0,0127 mm (.0005 inch) and smooth within 1,6 µm (63 microinch). Mounting bolts, when provided by customer, should be ISO 898 class 12.9 or better.

Dimensional Tolerances

Dimensional tolerance on interface drawings is 0,2 mm (0.008”) except where otherwise stated. ISO 4401 specifies inch conversion to 0.01”.

Conversion from Metric

IISO 4401 gives dimensions in mm. Inch conversions are accurate to 0.01” unless otherwise stated.

Mounting Bolt Tappings

ISO 4401 gives metric thread tappings.

Alternate UNC tappings are Vickers recommendations that allow these plates and associated valves to be used up to their maximum pressures, when using Vickers recommended bolt kits, or bolts of an equivalent strength. It is recommended that Customer’s own manifold blocks for UNC bolts should be tapped to the minimum depths given in the footnotes.

Mounting Surface Interface ISO 4401

Size 05

This interface conforms to:
ISO 4401-05-04-0-94
ANSI/B93.7M (and NFPA) size 05

CETOP R35H4.2-05

DIN 24340 Form A10

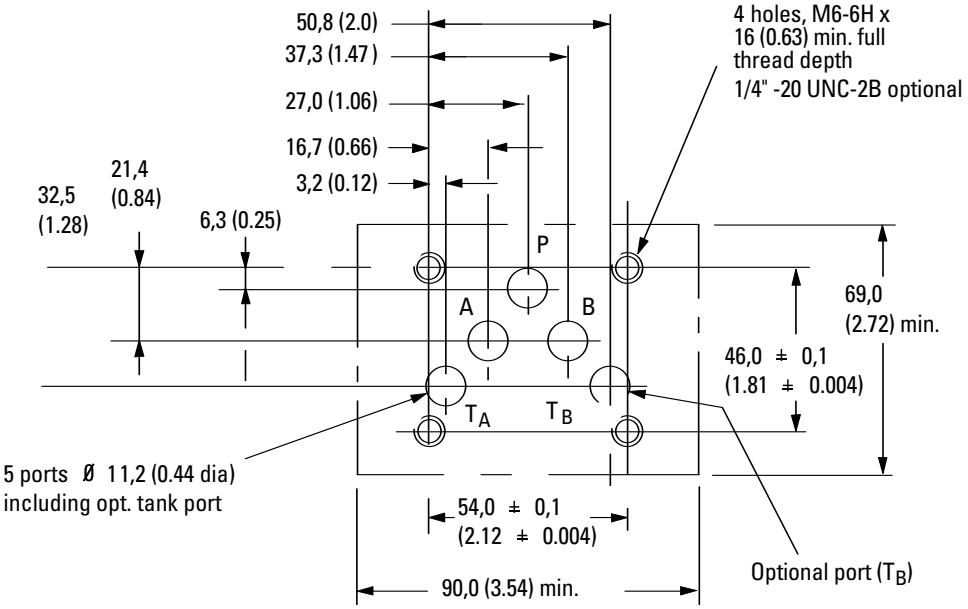

Interface with Additional Drain Port

The interface conforms to Vickers standard, plus hole “L” Typically used for proportional and other valves requiring an additional drain port.

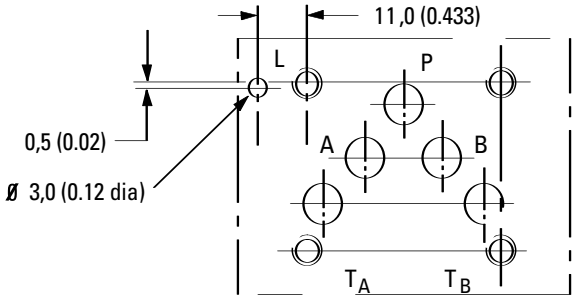

Electrical Block Diagram

Wiring

Connections must be made via the 7-pin plug mounted on the amplifier. See this leaflet and Installation Wiring Practices for VickersTM Electronic Products leaflet 2468. Recommended cable sizes are:

Power cables:

For 24V supply:
0,75 mm2 (18 AWG) up to 20m (65 ft)
1,00 mm2 (16 AWG) up to 40m (130 ft)

Signal cables:

0,50 mm2 (20 AWG)

Screen (shield):

A suitable cable would have 7 cores, a separate screen for the signal wires and an overall screen.

Cable outside diameter 8,0-10,5 mm (0.31- 0.41 inches)

See connection diagram on next page.

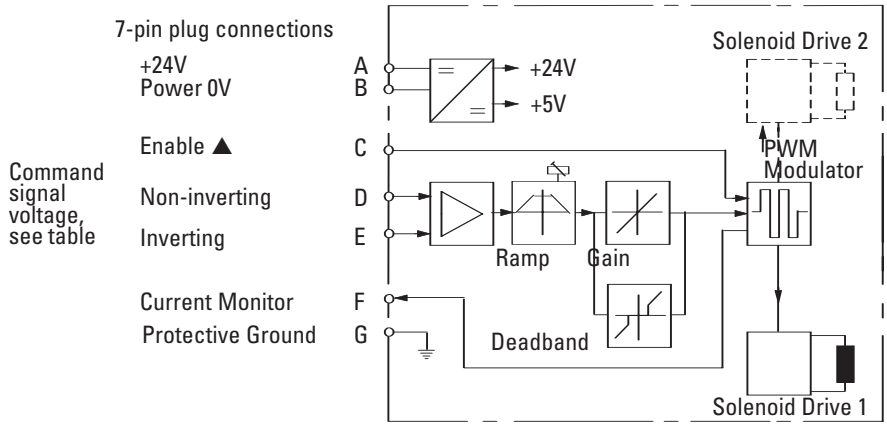

▲Note: In valves with PH7 or PR7 type electrical connection.

WARNING
All power must be switched off before connecting or disconnecting any plugs.

COMMAND SIGNALS AND OUTPUTS

7-pin plug			Flow direction
	Pin D	Pin E	
Command = Volts (±10V)	Positive 0V U_D - U_E = Positive	0V Negative	P to A
	Negative 0V U_D - U_E = Negative	0V Positive	P to B
	Pin D	Pin E	Flow direction
Command = Current (4-20mA)	more than 12 mA	Current return	P to A
	less than 12 mA	Current return	P to B

Typical Connection Arrangements

Wiring Connections

■ Pin C may be connected to ground or left unconnected.

WARNING

Do not ground pin C. If the local ground (pin C) is not used for differential monitor electronics, do not use. Read monitor pin F with respect to ground.

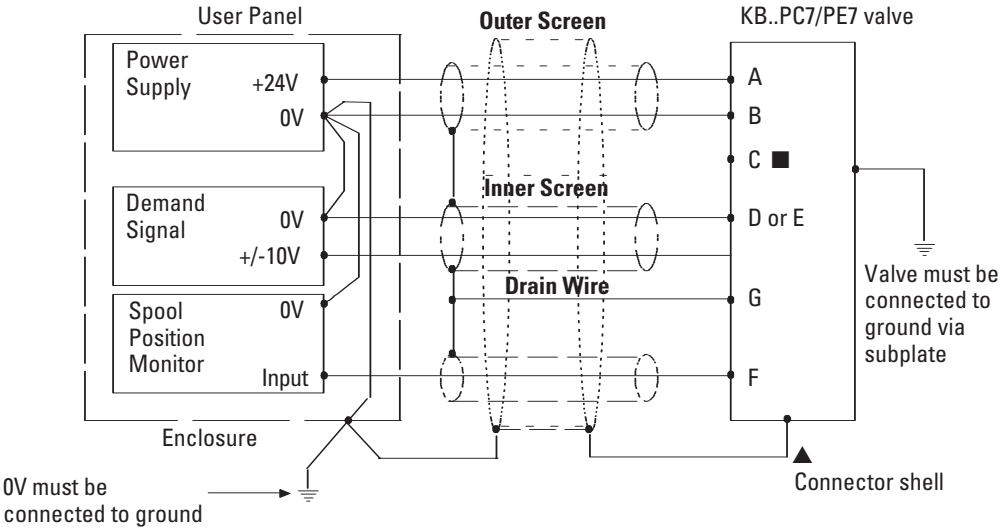

Wiring Connections for Valves with Enable Feature

▲Note:

In applications where the valve must conform to European RFI/EMC regulations, the outer screen (shield) must be connected to the outer shell of the 7-pin connector, and the valve body must be fastened to the earth ground. Proper earth grounding practices must be observed in this case, as any differences in command source and valve ground potentials will result in a screen (shield) ground loop.

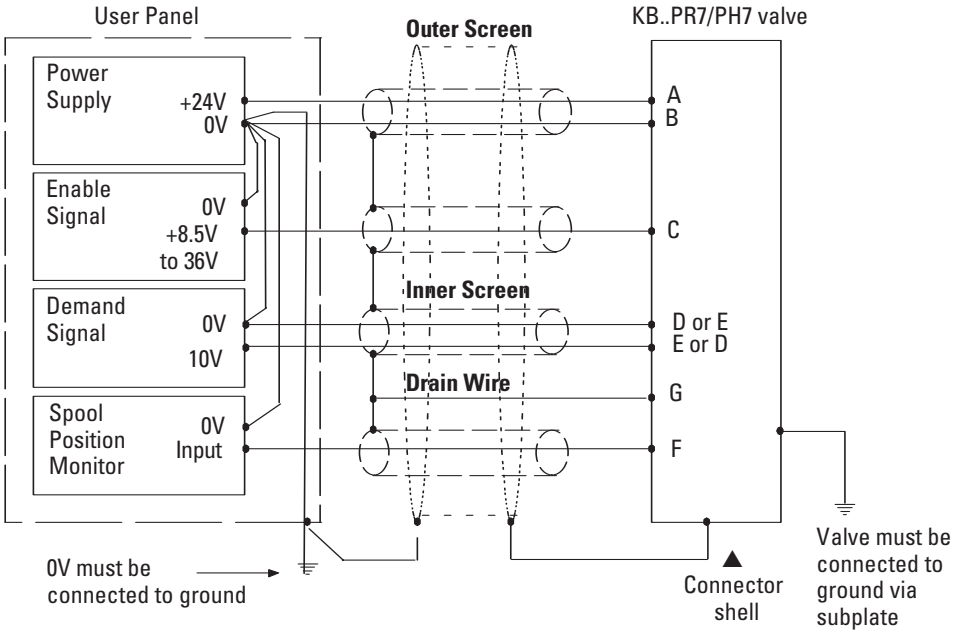

WARNING

Electromagnetic Compatibility (EMC)

It is necessary to ensure that the valve is wired up as above. For effective protection the user electrical cabinet, the valve subplate or manifold and the cable screens should be connected to efficient ground points.

The metal 7-pin connector part no. 934939 should be used for the integral amplifier.

In all cases both valve and cable should be kept as far away as possible from any sources of electromagnetic radiation such as cables carrying heavy current,

relays and certain kinds of portable radio transmitters, etc. Difficult environments could mean that extra screening may be necessary to avoid the interference.

It is important to connect the 0V lines as shown above. The multi-core cable should have at least two screens to separate the demand signal and monitor outputfrom the power lines.

The enable line to pin C should be outside the screen which contains the demand signal cables.

Fluid Cleanliness

Proper fluid condition is essential for long and satisfactory life of hydraulic components and systems. Hydraulic fluid must have the correct balance of cleanliness, materials and additives for protection against wear of components, elevated viscosity and inclusion of air.

Recommendations on contamination control methods and the selection of products to control fluid condition are included in Vickers publication 9132 or 561, "Vickers Guide to Systemic Contamination Control". The book also includes information on the Vickers concept of "ProActive Maintenance". The following recommendations are based on ISO cleanliness levels at 2 µm, 5 µm and 15 µm

For products in this catalog the recommended levels are:

0 to 70 bar (1000 psi) – 18/**16/13**

70 + bar (1000 + psi) – 17/**15/12**

Vickers products, as any components, will operate with apparent satisfaction in fluids with higher cleanliness codes than those described. Other manufacturers will often recommend levels above those specified.

Experience has shown, however, that life of any hydraulic components is shortened in fluids with higher cleanliness codes than those listed above. These codes have been proven to provide a long trouble-free service life for the products shown, regardless of the manufacturer.

Hydraulic Fluids

Materials and seals used in these valves are compatible with antiwear hydraulic oils, and non-alkyl-based phosphate esters. The extreme operating viscosity range is 500 to 13 cSt (2270 to 70 SUS) but the recommended running range is 54 to 13 cSt (245 to 70 SUS).

Installation

The proportional valves in this catalog can be mounted in any attitude, but it may be necessary in certain demanding applications, to ensure that the solenoids are kept full of hydraulic fluid. Good installation practice dictates that the tank port and any drain port are piped so as to keep the valves full of fluid once the system start-up has been completed.

Mounting Bolt Kits

BK02-156493M (metric)

BK590716 (inch)

If not using Vickers recommended bolt kits, bolts used should be to ISO 898, 12.9 or better.

Seal Kits

KBDG4V-5.....4998180-001

KBTG4V-5.....4998179-001

Plugs

7-pin plug (metal).....934939

7-pin plug (plastic).....694534

(metal plug must be used for full EMC protection)

Note:

An alternative metal connector which gives EMC protection but not IP67 rating is available from ITT-Cannon, part number CA06-COM-E-14S-A7-S.

Service Information

The products from this range are preset at the factory for optimum performance; disassembling critical items would destroy these settings. It is therefore recommended that should any mechanical or electronic repair be necessary they should be returned to the nearest Vickers repair center. The products will be refurbished as necessary and retested to specification before return.

Field repair is restricted to the replacement of the seals.

Note:

The feedback/solenoid assembly installed in this valve should not be disassembled.

Eaton
14615 Lone Oak Road
Eden Prairie, MN 55344
USA
Tel: 952 937-9800
Fax: 952 974-7722
www.hydraulics.eaton.com

Eaton
20 Rosamond Road
Footscray
Victoria 3011
Australia
Tel: (61) 3 9319 8222
Fax: (61) 3 9318 5714

Eaton
Dr.-Reckeweg-Str. 1
D-76532 Baden-Baden
Germany
Tel: (49) 7221 682-0
Fax: (49) 7221 682-788

Printed in USA
Document No. V-VLDI-MC002-E
September 2004